Chipman table, 36in diameter, dining height, with umbrella hole

Product Drawing

Date: 9/1/2023

www.landscapeforms.com Ph: 800.521.2546

*** TABLE WITH UMBRELLA HOLE MUST BE SURFACE MOUNTED***

ANCHORING HARDWARE INCLUDED. REFER TO INSTALLATION GUIDE FOR MORE DETAILS.

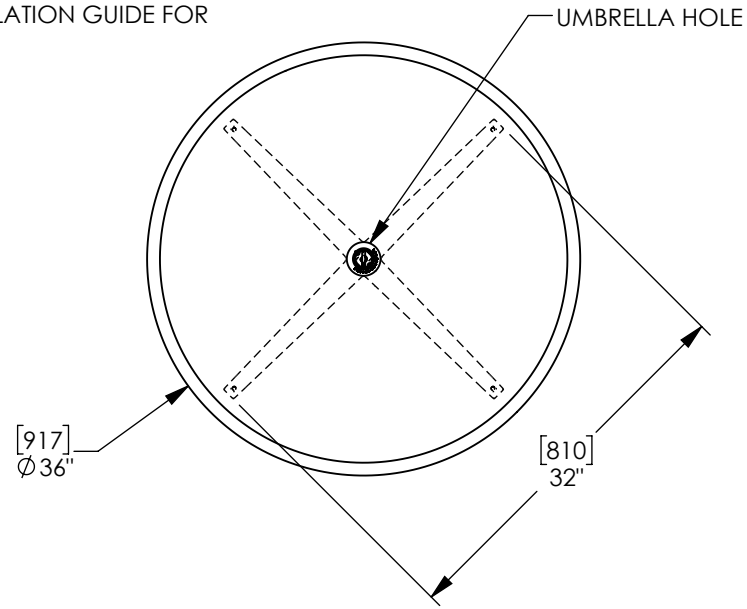

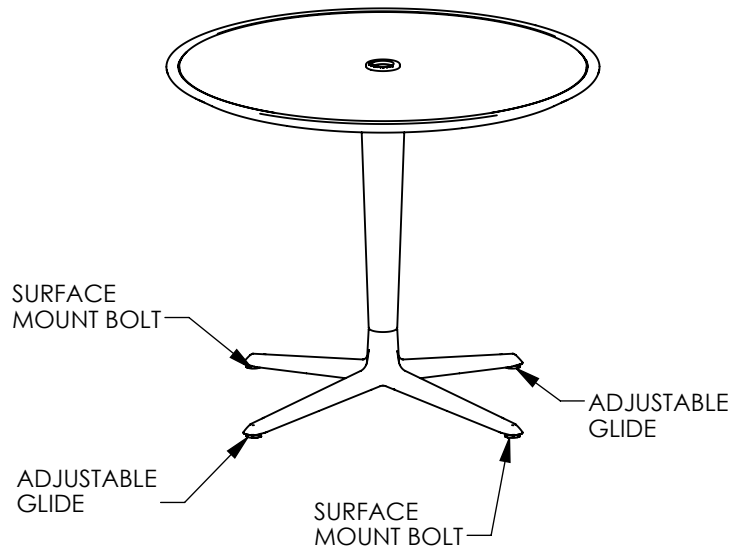

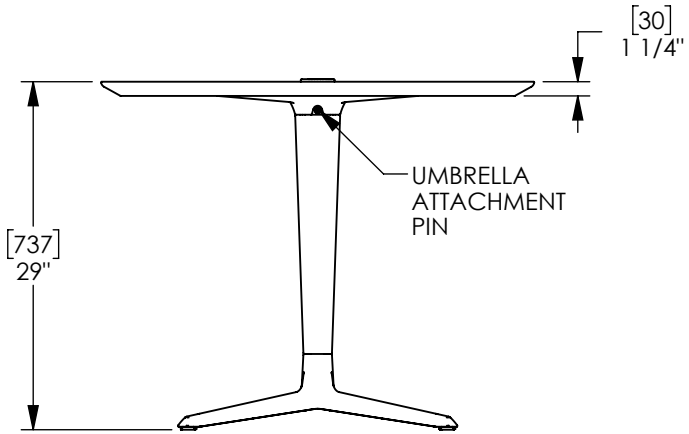

landscapeforms®

Drawing: CA205-02
Dimensions are in inches [mm]
U.S. Patent No. D718,558

CONFIDENTIAL DRAWING INFORMATION CONTAINED HEREIN IS THE PROPERTY OF LANDSCAPE FORMS. INTENDED USE IS LIMITED TO DESIGN PROFESSIONALS SPECIFYING LANDSCAPE FORMS PRODUCTS AND THEIR DIRECT CLIENTS. DRAWING IS NOT TO BE COPIED OR DISCLOSED TO OTHERS WITHOUT THE CONSENT OF LANDSCAPE FORMS. © 2023 LANDSCAPE FORMS ALL RIGHTS RESERVED.